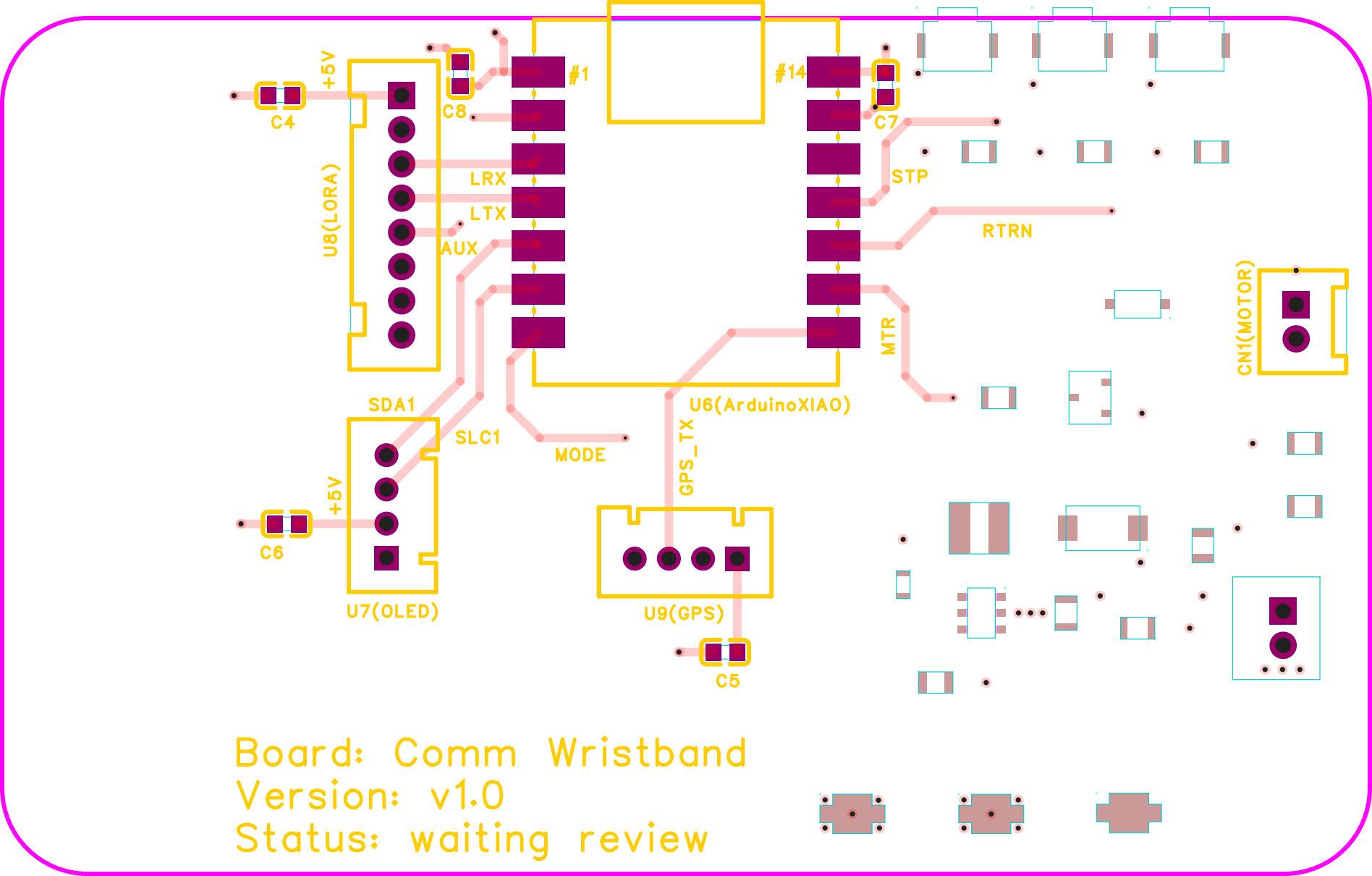
+5V
C4
C8
U8(LORA)
#1
#14
C7
LRX
LTX
AUX
STP
RTRN
MTR
CN1(MOTOR)
SDA1
SLC1
MODE
U6(ArduinoXIAO)
GPS_TX
+5V
C6
U7(OLED)
U9(GPS)
C5
Board: Comm Wristband
Version: v1.0
Status: waiting review

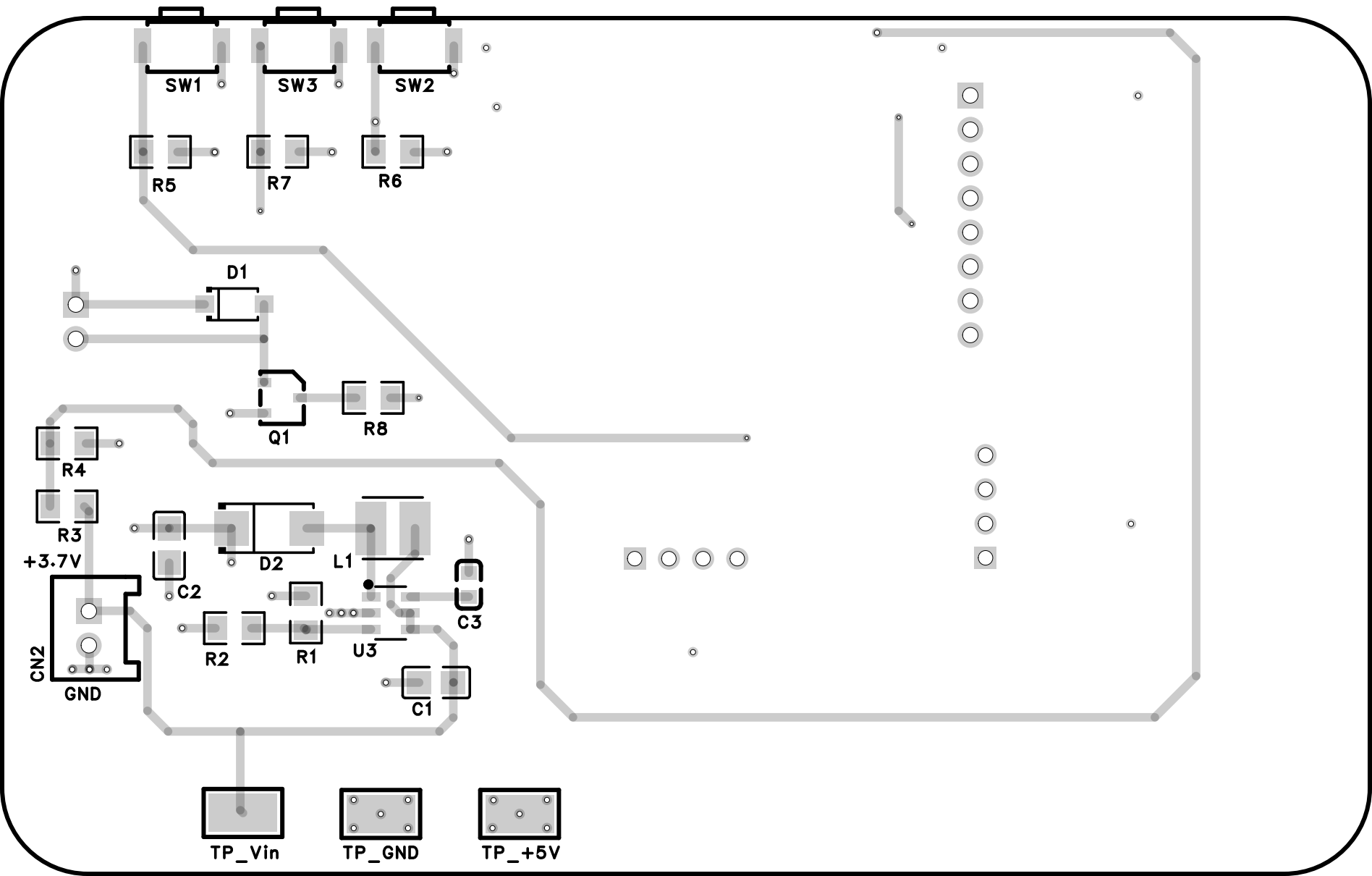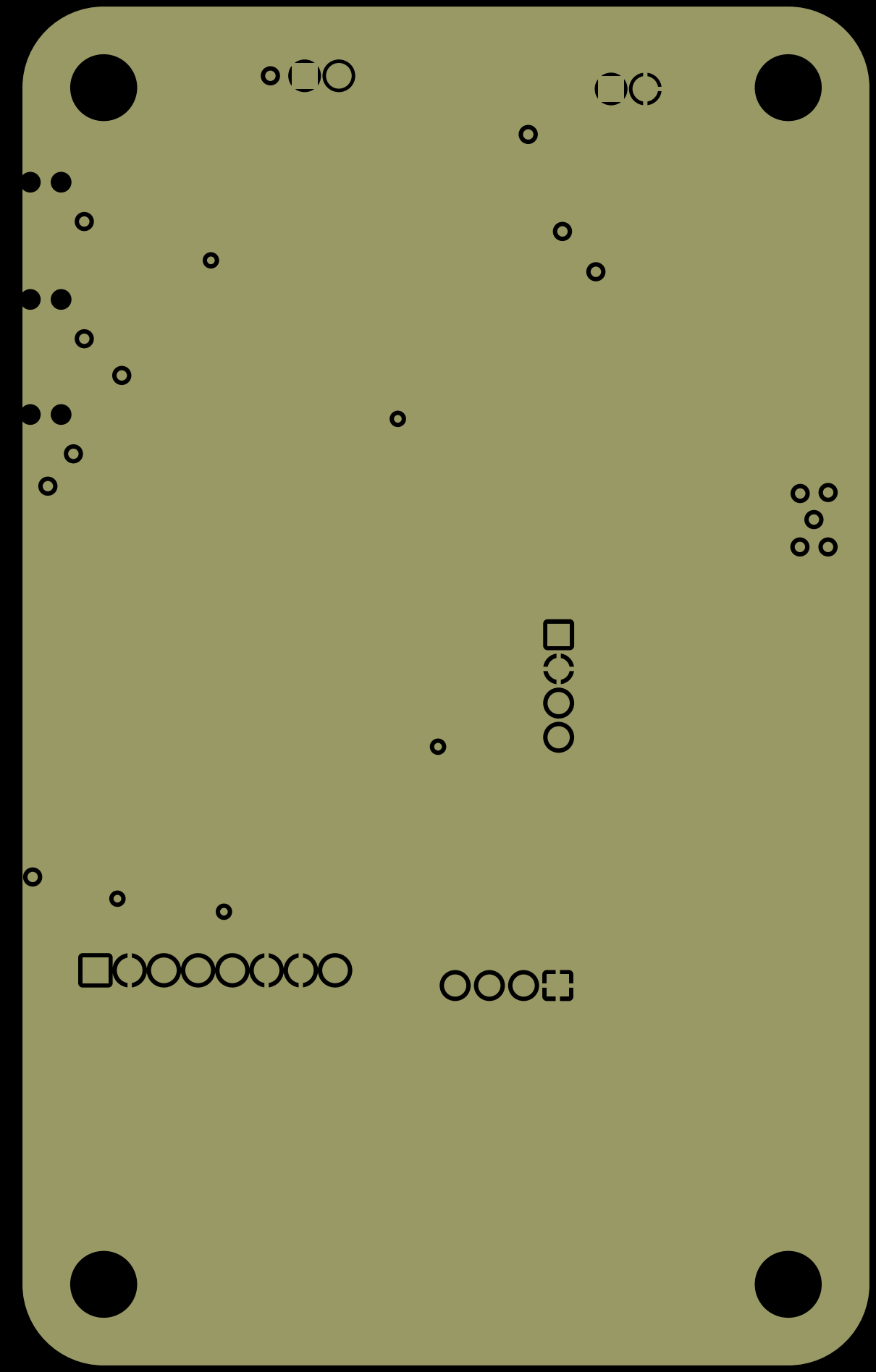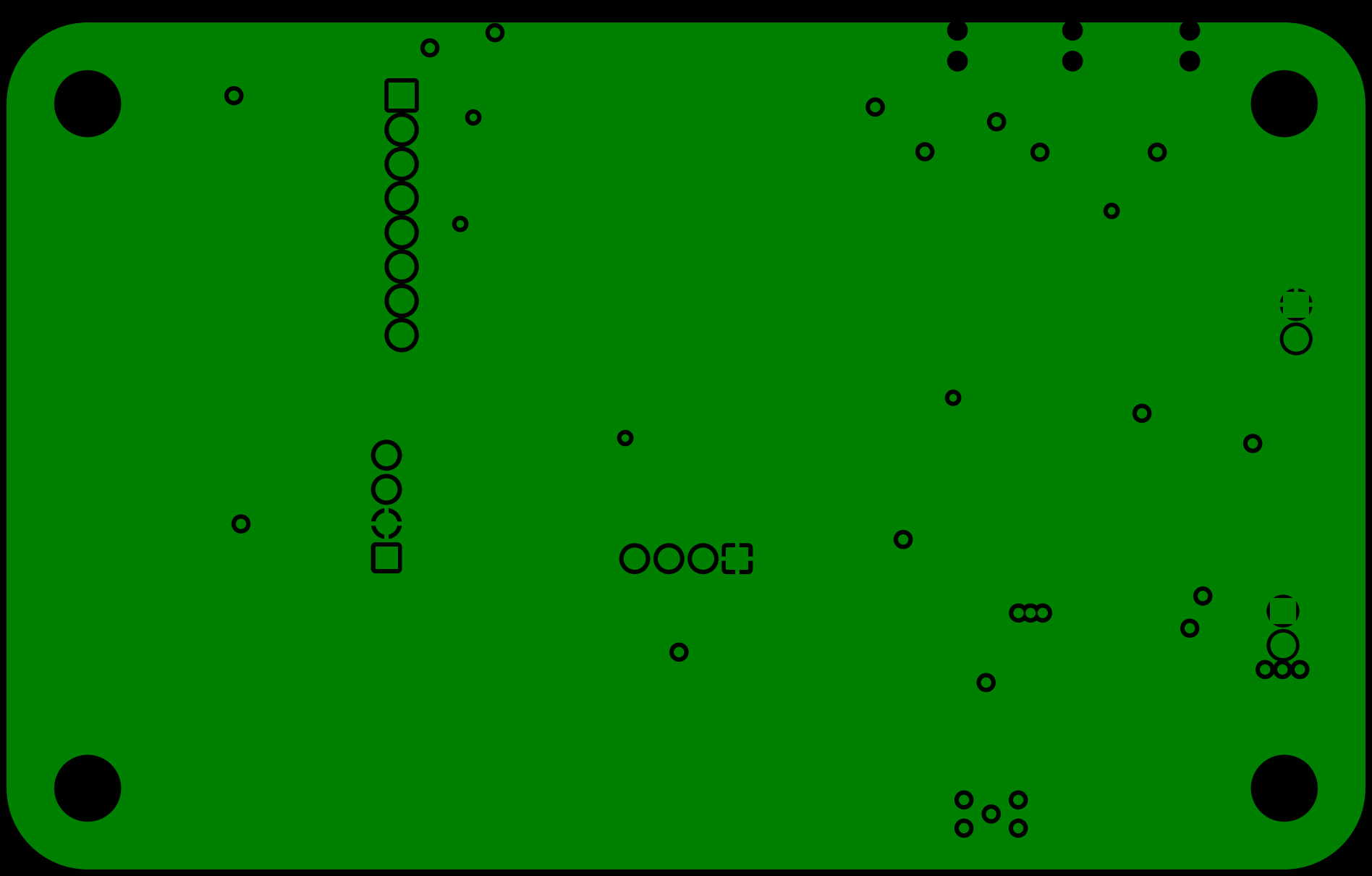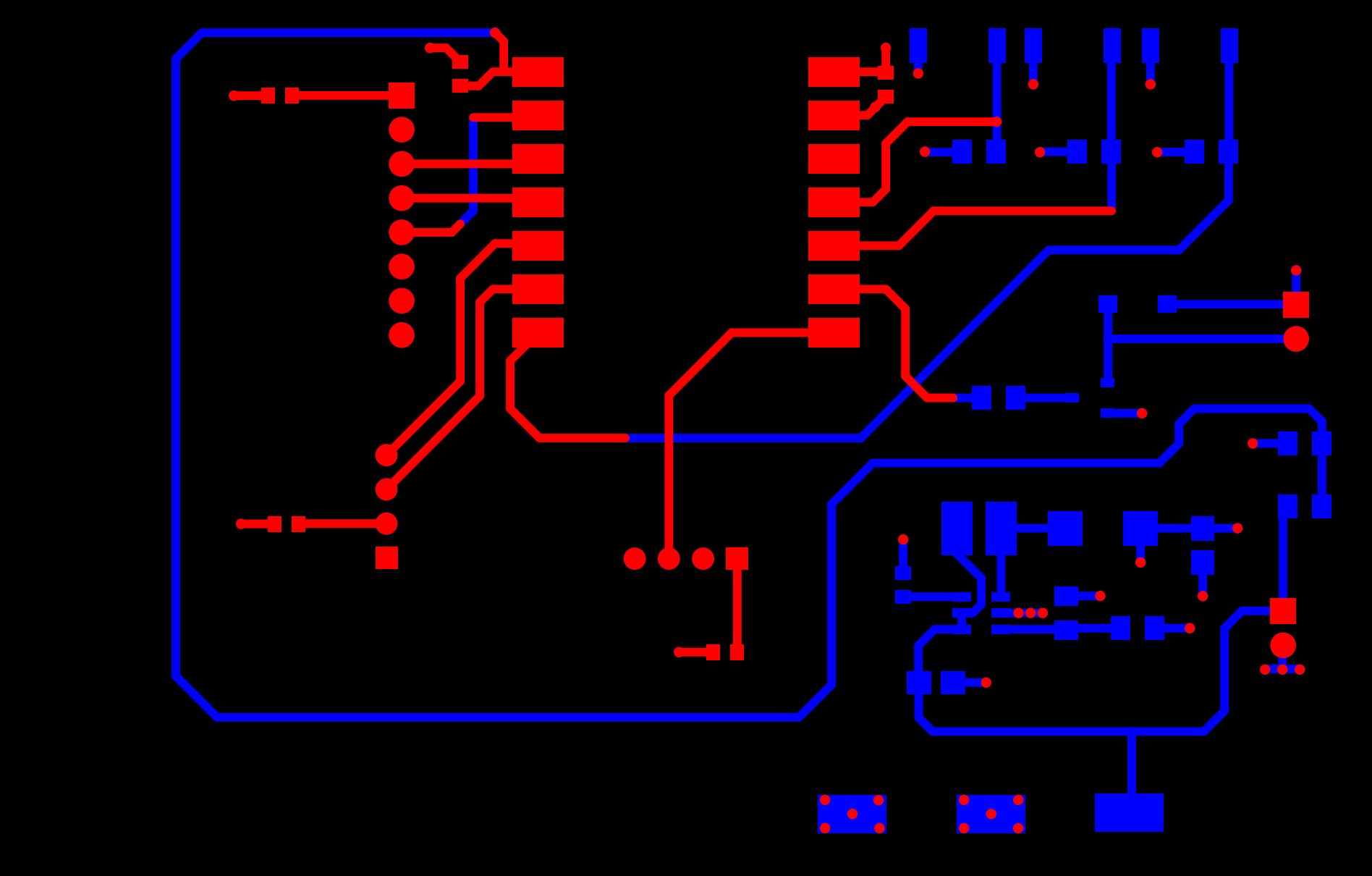
SW1
SW3
SW2
R5
R7
R6
D1
Q1
R8
R4
R3
+3.7V
C2
D2
L1
C3
CN2
GND
R2
R1
U3
C1
TP_Vin
TP_GND
TP_+5V